Surface Magnetic Contact

Code: SC517/WH/MULTI/G2/EN

SC517 | Surface Contact | Grade 2 | White | Multi Resistored

This compact surface mounted magnetic contact can be used in most security systems up to and including grade 2 as specified in EN50131-1: 2006 and is certified to EN50131-2-6:2008 and environmental class II (for use indoors) by Kiwa FSS. This contact can be used on windows and doors to detect the unauthorised entry of an intruder. The contact is also tamper protected against removal from its mounting surface.

Features & Benefits

- 4 Terminals
- Microswitch tamper
- Selectable end of line resistor
- Can use own resistors
- Available in white or brown
- Can be fitted in double pole systems
- Can be used on double door configuration
- Contact spacers available

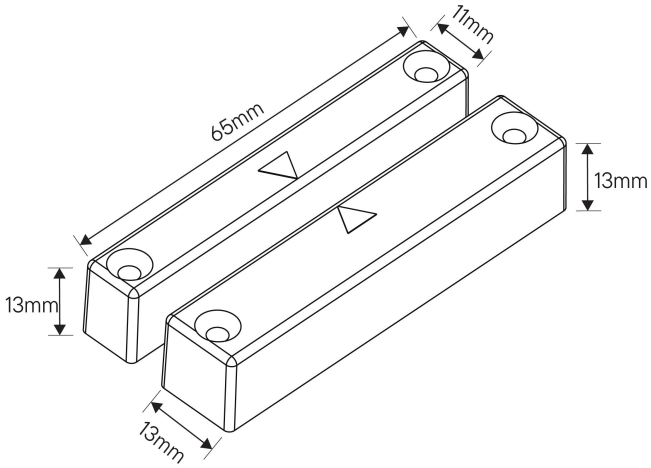

CQR Security, 125 Pasture Road, Moreton, Wirral, CH46 4TH

Sales: +44(0)151 6061000 (9am to 5pm Monday to Friday) **Tech:** +44(0)151 606 6311

sales@cqr.co.uk | www.cqr.co.uk

Company Registration Number: 5192024 | VAT Number: 309 0409 27

This document is uncontrolled if printed, all information is subject to change. Generated on 7/15/2025 9:38:55 AM

Product Information

Security Grade	2
Environmental Class	Class II
Standards	EN50131-1, EN50131-2-6, EN50130-5
Tamper Protection	RFMS
Warranty	2
Connection type	Wired

Housing

Colour	White
Material	HIPS

Electrical

Connection type	Wired
No. of terminals	4 Terminals
Contact type	Normally Closed
Contact Material	Palladium

Features

Mode of operation	DP, EOL/FSL
Resistor Type	A, B, D, E & I
Operation Axes (X, Y, Z)	X, Y
Pull-in gap (X, Y, Z)mm	25, 15
Suitable for Double Door	Yes
No. of terminals	4 Terminals

CQR Security, 125 Pasture Road, Moreton, Wirral, CH46 4TH

Sales: +44(0)151 6061000 (9am to 5pm Monday to Friday) **Tech:** +44(0)151 606 6311

sales@cqr.co.uk | www.cqr.co.uk

Company Registration Number: 5192024 | VAT Number: 309 0409 27

This document is uncontrolled if printed, all information is subject to change. Generated on 7/15/2025 9:38:55 AM